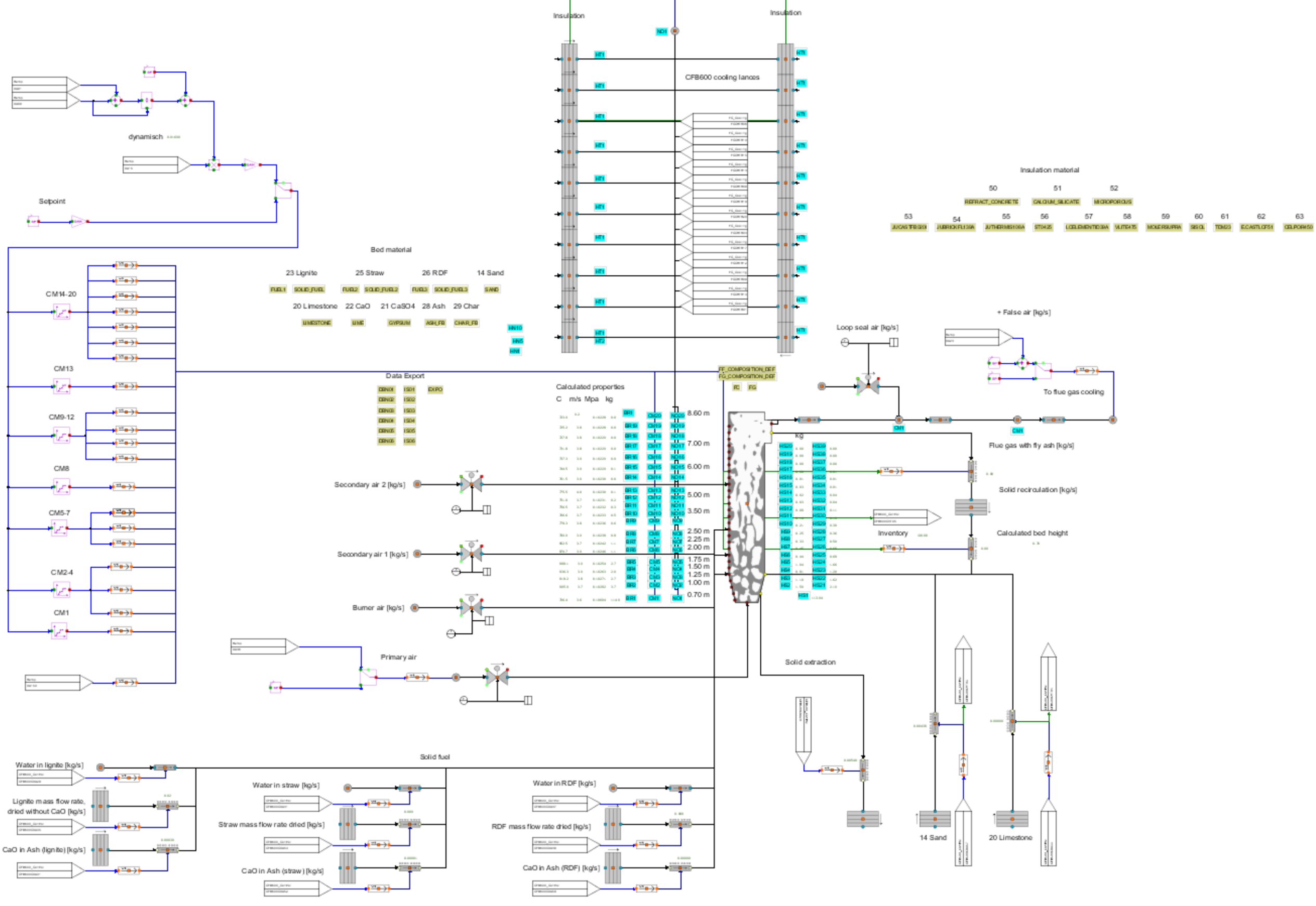

Insulation
Insulation
CFB600 cooling lances
dynamisch
Setpoint
Insulation material
50
51
52
REFRACT_CONCRETE
CALCIUM_SILICATE
MICROPOROUS
53
54
55
56
57
58
59
60
61
62
63
Bed material
23 Lignite
25 Straw
26 RDF
14 Sand
20 Limestone
22 CaO
21 CaSO4
28 Ash
29 Char
CM14-20
CM13
CM9-12
CM8
CM5-7
CM2-4
CM1
Data Export
Calculated properties
C m/s Mpa kg
8.60 m
7.00 m
6.00 m
5.00 m
3.50 m
2.50 m
2.25 m
2.00 m
1.75 m
1.50 m
1.25 m
1.00 m
0.70 m
Loop seal air [kg/s]
+ False air [kg/s]
To flue gas cooling
Flue gas with fly ash [kg/s]
Solid recirculation [kg/s]
Inventory
Calculated bed height
Secondary air 2 [kg/s]
Secondary air 1 [kg/s]
Burner air [kg/s]
Primary air
Solid extraction
Solid fuel
Water in lignite [kg/s]
Lignite mass flow rate, dried without CaO [kg/s]
CaO in Ash (lignite) [kg/s]
Water in straw [kg/s]
Straw mass flow rate dried [kg/s]
CaO in Ash (straw) [kg/s]
Water in RDF [kg/s]
RDF mass flow rate dried [kg/s]
CaO in Ash (RDF) [kg/s]
14 Sand
20 Limestone